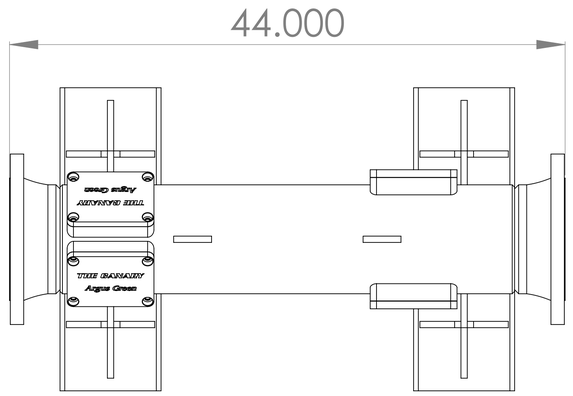


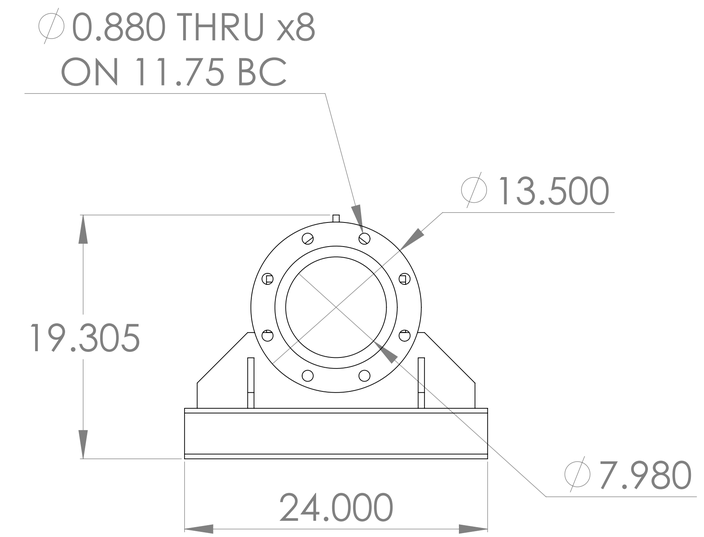


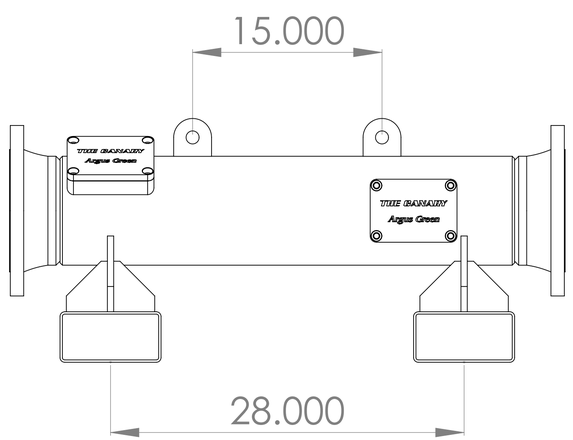


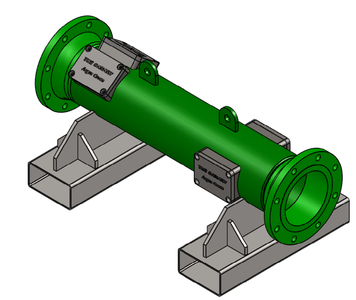

# Argus Green

**PROPRIETARY AND CONFIDENTIAL**

THE INFORMATION CONTAINED IN THIS DRAWING IS THE SOLE PROPERTY OF Argus Green. ANY REPRODUCTION IN PART OR AS A WHOLE WITHOUT THE WRITTEN PERMISSION OF Argus Green IS PROHIBITED.

UNLESS OTHERWISE SPECIFIED:

DIMENSIONS ARE IN INCHES

TOLERANCES:

| INCHES | METRIC |
|---|---|
| XXX ± .005 | XXX ± |
| XX ± .015 | XX ± |
| X ± .032 | X ± |

| | NAME | DATE |
|---|---|---|
| DRAWN | | |
| CHECKED | | |
| ENG APPR. | | |
| MFG APPR. | | |
| Q.A. | | |

| | |
|---|---|
| MATERIAL | |
| Weight | 247.03 |
| FINISH | |
| Comments: | |

Project The Canary

DWG. NO. | Part NO.

Description: Flow Cell - Ø8" Schedule 40

REV

SCALE: 1:10 | SIZE: D | SHEET 2 OF 2